MF840-02

EPSON

CMOS 4-BIT SINGLE CHIP MICROCOMPUTER

S5U1C62M10E Manual

(Evaluation Board for S1C62M20)

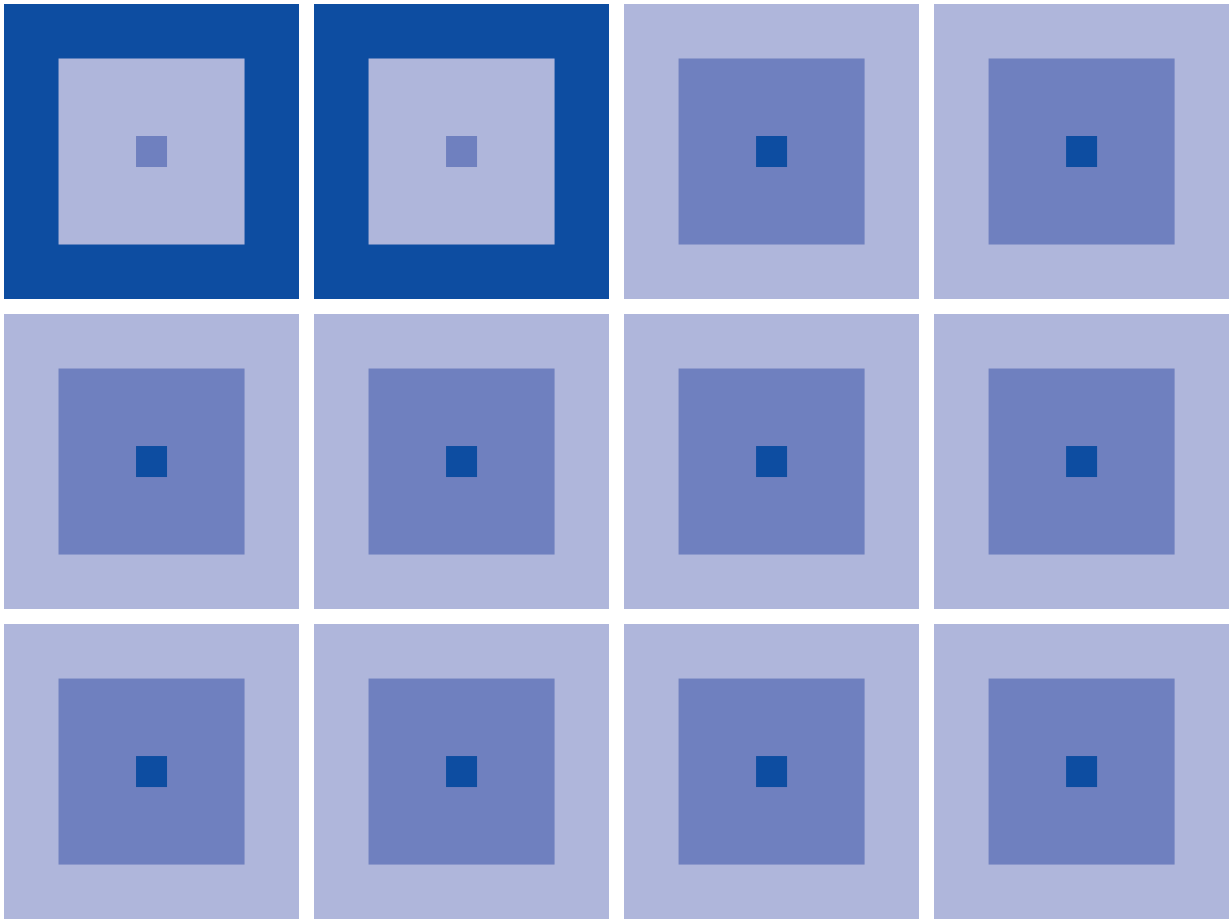

SEIKO EPSON CORPORATION

NOTICE

No part of this material may be reproduced or duplicated in any form or by any means without the written permission of Seiko Epson. Seiko Epson reserves the right to make changes to this material without notice. Seiko Epson does not assume any liability of any kind arising out of any inaccuracies contained in this material or due to its application or use in any product or circuit and, further, there is no representation that this material is applicable to products requiring high level reliability, such as medical products. Moreover, no license to any intellectual property rights is granted by implication or otherwise, and there is no representation or warranty that anything made in accordance with this material will be free from any patent or copyright infringement of a third party. This material or portions thereof may contain technology or the subject relating to strategic products under the control of the Foreign Exchange and Foreign Trade Law of Japan and may require an export license from the Ministry of International Trade and Industry or other approval from another government agency.

© **SEIKO EPSON CORPORATION** 2001 All rights reserved.

The information of the product number change

Starting April 1, 2001, the product number will be changed as listed below. To order from April 1, 2001 please use the new product number. For further information, please contact Epson sales representative.

Configuration of product number

Devices

S1 C 60N01 F 0A01 00

- 00 — Packing specification
- 0A01 — Specification
- F — Package (D: die form; F: QFP)
- 60N01 — Model number
- C — Model name (C: microcomputer, digital products)
- S1 — Product classification (S1: semiconductor)

Development tools

S5U1 C 60R08 D1 1 00

- 00 — Packing specification
- 1 — Version (1: Version 1 *2)
- D1 — Tool type (D1: Development Tool *1)
- 60R08 — Corresponding model number (60R08: for S1C60R08)
- C — Tool classification (C: microcomputer use)
- S5U1 — Product classification (S5U1: development tool for semiconductor products)

*1: For details about tool types, see the tables below. (In some manuals, tool types are represented by one digit.)
*2: Actual versions are not written in the manuals.

Comparison table between new and previous number

S1C60 Family processors

Previous No.	New No.
E0C6001	S1C60N01
E0C6002	S1C60N02
E0C6003	S1C60N03
E0C6004	S1C60N04
E0C6005	S1C60N05
E0C6006	S1C60N06
E0C6007	S1C60N07
E0C6008	S1C60N08
E0C6009	S1C60N09
E0C6011	S1C60N11
E0C6013	S1C60N13
E0C6014	S1C60140
E0C60R08	S1C60R08

S1C62 Family processors

Previous No.	New No.
E0C621A	S1C621A0
E0C6215	S1C62150
E0C621C	S1C621C0
E0C6S27	S1C6S2N7
E0C6S37	S1C6S3N7
E0C623A	S1C6N3A0
E0C623E	S1C6N3E0
E0C6S32	S1C6S3N2
E0C6233	S1C62N33
E0C6235	S1C62N35
E0C623B	S1C6N3B0
E0C6244	S1C62440
E0C624A	S1C624A0
E0C6S46	S1C6S460

Previous No.	New No.
E0C6247	S1C62470
E0C6248	S1C62480
E0C6S48	S1C6S480
E0C624C	S1C624C0
E0C6251	S1C62N51
E0C6256	S1C62560
E0C6292	S1C62920
E0C6262	S1C62N62
E0C6266	S1C62660
E0C6274	S1C62740
E0C6281	S1C62N81
E0C6282	S1C62N82
E0C62M2	S1C62M20
E0C62T3	S1C62T30

Comparison table between new and previous number of development tools

Development tools for the S1C60/62 Family

Previous No.	New No.
ASM62	S5U1C62000A
DEV6001	S5U1C60N01D
DEV6002	S5U1C60N02D
DEV6003	S5U1C60N03D
DEV6004	S5U1C60N04D
DEV6005	S5U1C60N05D
DEV6006	S5U1C60N06D
DEV6007	S5U1C60N07D
DEV6008	S5U1C60N08D
DEV6009	S5U1C60N09D
DEV6011	S5U1C60N11D
DEV60R08	S5U1C60R08D
DEV621A	S5U1C621A0D
DEV621C	S5U1C621C0D
DEV623B	S5U1C623B0D
DEV6244	S5U1C62440D
DEV624A	S5U1C624A0D
DEV624C	S5U1C624C0D
DEV6248	S5U1C62480D
DEV6247	S5U1C62470D

Previous No.	New No.
DEV6262	S5U1C62620D
DEV6266	S5U1C62660D
DEV6274	S5U1C62740D
DEV6292	S5U1C62920D
DEV62M2	S5U1C62M20D
DEV6233	S5U1C62N33D
DEV6235	S5U1C62N35D
DEV6251	S5U1C62N51D
DEV6256	S5U1C62560D
DEV6281	S5U1C62N81D
DEV6282	S5U1C62N82D
DEV6S27	S5U1C6S2N7D
DEV6S32	S5U1C6S3N2D
DEV6S37	S5U1C6S3N7D
EVA6008	S5U1C60N08E
EVA6011	S5U1C60N11E
EVA621AR	S5U1C621A0E2
EVA621C	S5U1C621C0E
EVA6237	S5U1C62N37E
EVA623A	S5U1C623A0E

Previous No.	New No.
EVA623B	S5U1C623B0E
EVA623E	S5U1C623E0E
EVA6247	S5U1C62470E
EVA6248	S5U1C62480E
EVA6251R	S5U1C62N51E1
EVA6256	S5U1C62N56E
EVA6262	S5U1C62620E
EVA6266	S5U1C62660E
EVA6274	S5U1C62740E
EVA6281	S5U1C62N81E
EVA6282	S5U1C62N82E
EVA62M1	S5U1C62M10E
EVA62T3	S5U1C62T30E
EVA6S27	S5U1C6S2N7E
EVA6S32R	S5U1C6S3N2E2
ICE62R	S5U1C62000H
KIT6003	S5U1C60N03K
KIT6004	S5U1C60N04K
KIT6007	S5U1C60N07K

S5U1C62M10E Manual (Evaluation Board for S1C62M20)

This manual describes the components of the S5U1C62M10E, a debugging tool for the S1C62M20 4-bit, single-chip microcomputer, and explains how to test its operation.

Refer to the "S1C62M20 Technical Manual" for details of the S1C62M20, and the "S5U1C62000A Manual" and the "S5U1C62M20D Manual" for the development procedure and other information.

Contents

1 INTRODUCTION 1
- 1.1 S5U1C62M10E Outline 1
- 1.2 S5U1C62M10E Components 1

2 PRECAUTIONS 2
- 2.1 Notes for Use and Operation 2
- 2.2 Differences from Actual IC 3

3 NAMES AND FUNCTIONS OF PARTS 6
- 3.1 Basic Functions 6
- 3.2 Operating Panel (Top view) 6
- 3.3 Under Top Cover 8
- 3.4 Front Panel 9
- 3.5 Rear Panel 9

4 CABLE CONNECTION 10
- 4.1 Connection to ICE 10
- 4.2 Power Cable Connection 10
- 4.3 Connection to Target System 10

5 OPERATION METHOD OF S5U1C62M10E 12
- 5.1 Preparation 12
  - 5.1.1 Creation of target system 12
  - 5.1.2 Creation and installation of ROMs 12
- 5.2 Independent Use of S5U1C62M10E 13
  - 5.2.1 Power on/off 13
  - 5.2.2 Debugging 13
- 5.3 Operation When ICE is Connected 14
  - 5.3.1 Power on/off 14
  - 5.3.2 Debugging 14

6 OPERATING TEST 15

7 PRODUCT SPECIFICATIONS 17

1 INTRODUCTION

1.1 S5U1C62M10E Outline

The S5U1C62M10E is a debugging tool for the S1C62M20, with various functions such as single step and program break.
Almost the same functions that the S1C62M20 CPU has can be implemented by writing application program and option data created by the option generator into EPROM, and installing it in the S5U1C62M10E.
Debugging and CPU monitoring can be done using the S5U1C62M10E operation switches and LED indicators; therefore, debugging is possible with the S5U1C62M10E alone.
In addition, the S5U1C62M10E can interface with the in-circuit emulator ICE (S5U1C62000H), and so perform a higher level of debugging.

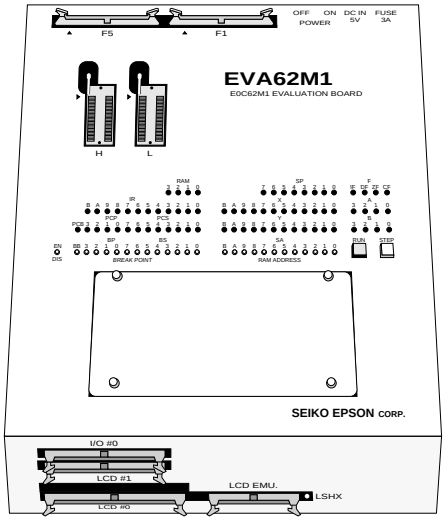

∗ The name 'EVA62M1' on the development tool is the old name of the product.

1.2 S5U1C62M10E Components

When unpacking the S5U1C62M10E, check that the following goods are present:

(1)	S5U1C62M10E main unit	1
(2)	LCD connection cable and connector (60-pin flat type)	1 set
(3)	I/O connection cable and connector (50-pin flat type)	2 set
(4)	Power cable (3-pin)	1 set
(5)	Diagnostic ROMs (two)	1 set
(6)	Fuse (3 A)	1
(7)	S5U1C62M10E Manual (Evaluation Board for S1C62M20) (this manual)	1
(8)	Warranty registration card	1
(9)	Warranty certificate	1
(10)	Notes for using	1

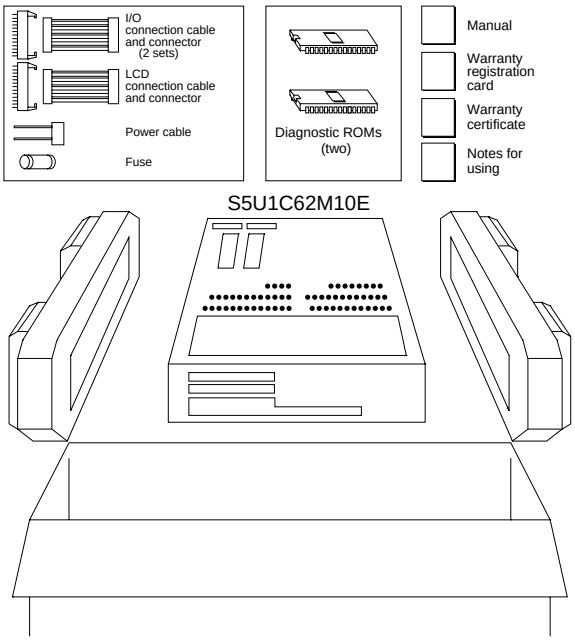

Fig. 1.2.1 S5U1C62M10E package

2 PRECAUTIONS

Take the following precautions when using the S5U1C62M10E:

2.1 Notes for Use and Operation

■ Notes for analog circuit related

- External wiring for input/output should be as short as possible.
  Be aware that if the input wiring is long it causes noise that decreases the precision of the A/D conversion.
- Some A/D related terminals do not project from the S5U1C62M10E. Therefore, these signal waveforms cannot be checked. See Section 2.2 "Differences from Actual IC" for details.

■ Notes for operation

- Turn the power of all equipment off before connecting or disconnecting cables.
- To turn the POWER switch of the S5U1C62M10E off, then on again, wait for at least 10 seconds after turning off before turning on.
- When ROMs are inserted into the L and H ROM sockets, lock the lever securely by positioning it horizontally. After the ROMs have been removed from the sockets, lock the lever at the same position above. If the lever is left upright, poor contact may result.
- Confirm that the following ROMs have been installed correctly, then operate the S5U1C62M10E.

(Top panel)	Program ROM	2	L.HEX, H.HEX
(Under top cover)	Function option ROM	1	F.HEX
	Segment option ROM	1	S.HEX

- If the S5U1C62M10E does not operate normally, perform the operation test (Chapter 6).

2.2 Differences from Actual IC

There are some differences in functions between the S5U1C62M10E and the actual IC.

■ Differences on operating voltage and electrical characteristics

- The S5U1C62M10E operating voltage is fixed at 5 V.
  The S5U1C62M10E generates V_{SSA} by halving the supply voltage, not voltage boosting. The supply voltage is directly used as V_{SS2} and V_{SS2} control (turning ON and OFF) affects only the LED under the top cover.
  V_{DD}–V_{SS}=5.0 V V_{DD}–V_{SSA}=2.5 V V_{DD}–V_{SS2}=5.0 V

- DC characteristics (input/output current, input voltage, current consumption, etc.) and AC characteristics (response time, oscillation start time, etc.) are different from those of the actual IC. Consequently, it is impossible to evaluate current consumption using the S5U1C62M10E.

■ I/O differences

The response time has been changed by the differences in logic level, output drive capability, and pull-down resistance. When creating key scan routines, especially, pay attention to the response time.

■ LCD differences

- The S5U1C62M10E has no regulated voltage circuit built-in and generates the LCD drive voltage by dividing the supply voltage (5 V) with resistors. The actual IC generates the LCD drive voltage using the boosted voltage V_{SS2} and a time interval is required from turning V_{SS2} on to turning the LCD driver on. Refer to the "S1C62M20 Technical Manual" for details.

- The drive voltage can be changed by the VADJ control under the top cover, but the actual IC has no adjustment function.

- The output drive capability is different.

■ Power-on sequence differences

The S5U1C62M10E performs configuration and determines the internal state when the power is switched on. Then, it works as the IC does. Therefore, the I/O state of the S5U1C62M10E is unstable until configuration has completed. This affects the power-on reset time.

■ Function differences

<SVD circuit>

- The SVD function is implemented by varying the apparent power supply voltage with the VSVD control.

- The SVD stabilization time (time until the detection result stabilizes after turning the circuit on) of the S5U1C62M10E is shorter than that of the actual IC. Therefore, be sure to secure the stabilization time according to the actual IC. Refer to the "S1C62M20 Technical Manual" for the stabilization time.

- The detection voltage is different from the actual IC.

<Oscillation circuit>

- OSC1 crystal oscillation frequency is fixed at 32.768 kHz.

- The oscillation start and stop times are different from those of the IC.

<A/D converter>

- Measurement precision of the S5U1C62M10E A / D conversion circuit is inferior to the actual IC due to the characteristic differences of the elements used.
  The measurement results of the S5U1C62M10E are shown below. (Ta=25°C, V_{DD}–V_{SS}=5.0 V)
  However,the following measurement values are for reference only, and are not guaranteed to operate.

Range		Absolute error [%]		Zero-point error [count]	
		S5U1C62M10E	IC's ability value	S5U1C62M10E	IC's ability value
DCV	400 mV	+0.29 ~-3.60	+0.10 ~-0.10	-42 ~-101	0
DCV	4 V	+0.15 ~-4.20	+0.11 ~-0.11	+11 ~-36	0
DCV	40 V	+0.45 ~-4.39	+0.10 ~-0.10	+15 ~-37	0
DCV	400 V	+0.71 ~-4.23	+0.10 ~-0.10	+11 ~-35	0
DCV	1000 V	+2.80 ~-14.80	+0.41 ~-0.20	+10 ~-34	0
ACV	400 mV	-30.27 ~-31.47	+0.10 ~-0.60	55 ~46	0
ACV	4 V	+0.80 ~-0.90	+0.08 ~-0.41	26 ~10	0
ACV	40 V	+2.26 ~+0.80	-0.15 ~-0.65	18 ~0	0
ACV	400 V	+2.60 ~+0.60	-0.08 ~-0.71	17 ~0	0
ACV	750 V	+6.50 ~-7.00	+0.58 ~-1.00	14 ~0	0
DCA	400 mA	+0.90 ~-4.30	+0.10 ~-0.10	+11 ~-35	0
ACA	400 mA	+2.32 ~+1.00	+0.24 ~-0.50	15 ~0	0
OHM	400 Ω	+0.80 ~-2.10	+0.30 ~-0.31	17 ~0	0
OHM	4 kΩ	+0.90 ~-0.70	+0.20 ~-0.24	5 ~0	0
OHM	40 kΩ	+0.91 ~-0.98	+0.21 ~-0.21	6 ~0	0
OHM	400 kΩ	+0.50 ~-1.49	+0.04 ~-0.47	7 ~0	0
OHM	4 MΩ	-0.40 ~-4.44	+0.44 ~-0.36	6 ~0	0
OHM	40 MΩ	-9.54 ~-26.84	+1.20 ~-0.34	5 ~0	0
CONT		54Ω	41 Ω ~47 Ω		

Note: The IC's ability values have been measured according to the "Diagram of Basic External Connections" shown in the "S1C62M20 Technical Manual" and include the characteristics of the external circuits. They also include part of the temperature characteristics and supply voltage characteristics.
Do not evaluate temperature characteristics or supply voltage characteristics using the S5U1C62M10E.

- The V_{REF} adjustment method is different.
  In the S5U1C62M10E, V_{RF1} cannot be adjusted since the V_{ADJ} terminal cannot be used. Therefore V_{RF2} should be adjusted according to Figure 2.2.1.

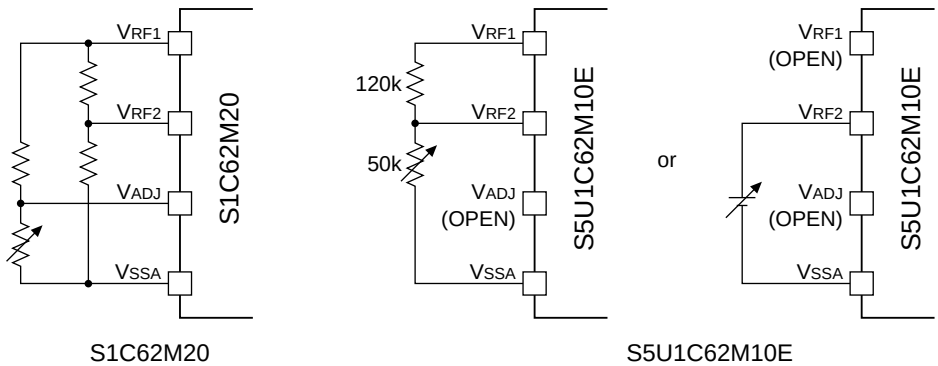

Fig. 2.2.1 V_{REF} adjustment difference

- The V_{RMES} power circuit is different.
  The actual IC generates V_{RMES} (output voltage during resistance measurement) internally based on V_{RF1}, but the S5U1C62M10E generates it based on V_{RF2}. Therefore V_{RMES} changes depending on the V_{RF2} value.

- The connection of the external elements that is needed for A / D conversion is different.
  The S5U1C62M10E has some parts built in for the external circuit in order to prevent deterioration of A / D conversion precision. (See Figure 2.2.2) Refer to the "S1C62M20 Technical Manual" for the other terminals.

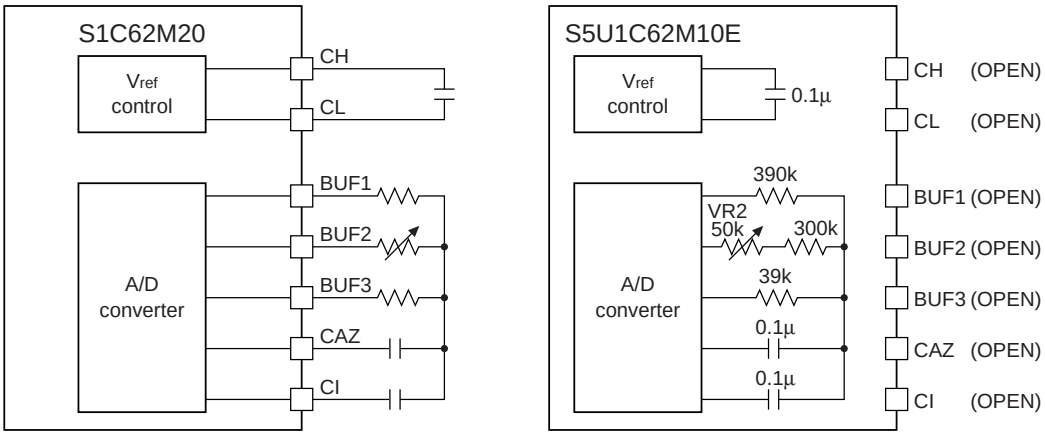

Fig. 2.2.2 External elements difference

The VR2 control that is shown in Figure 2.2.2 is mounted to the right side of the I / O #1 connector. Remove the front panel to adjust the VR2 control. The VR1 control is not used.

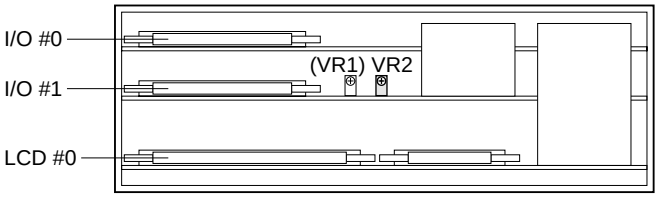

Fig. 2.2.3 Front panel

- The status of the A / D output terminals during standby are different.
  The A / D conversion circuit in the S5U1C62M10E always operate regardless of the A / D on / off control. Therefore, the terminal output status is different from the actual IC when the A / D converter is off. Moreover, V_{RF1} and V_{SS2} are always output. Therefore in the S5U1C62M10E, A / D conversion results can be obtained if V_{SS2} on / off control has not be done. However, be aware that the correct A / D conversion results cannot be obtained in the actual IC if the control has not be done. In addition, a time interval from turning V_{SS2} on to turning the A / D converter or the LCD driver on in the actual IC is necessary. Refer to the "S1C62M20 Technical Manual" for details.

3 NAMES AND FUNCTIONS OF PARTS

This section describes the names and functions of the parts of the S5U1C62M10E.

3.1 Basic Functions

The S5U1C62M10E has the following basic functions:

■ Program execution (Run function)

Install the EPROM containing the application program and execute the program.

■ Single-step program operation (Single-step function)

Programs may be run instruction by instruction to check the internal state of the CPU as it changes with each instruction.

■ Program execution suspension at a given address (Break function)

A breakpoint may be set at an address at which it is desired to suspend program execution. After execution has stopped at the breakpoint, it can be restarted with the program run function.

■ Displaying program addresses and instruction codes during a break

Program addresses and instruction codes may be displayed on the LED indicators.

■ Displaying the contents of RAM, registers, and flags during a break

The contents of RAM, the A, B, X, and Y registers, the stack pointers, and the flags may be displayed on the LED indicators during a break.

■ Interface with ICE

The S5U1C62M10E can interface with the ICE so that a higher level debugging environment may be established.

■ Setting hardware options by installing function option and segment option ROMs

Hardware options, i.e., I/O ports and segments, can be specified by writing option data for the function option created by the function option generator and the segment option created by the segment option generator into EPROM, and installing the EPROM.

3.2 Operating Panel (Top view)

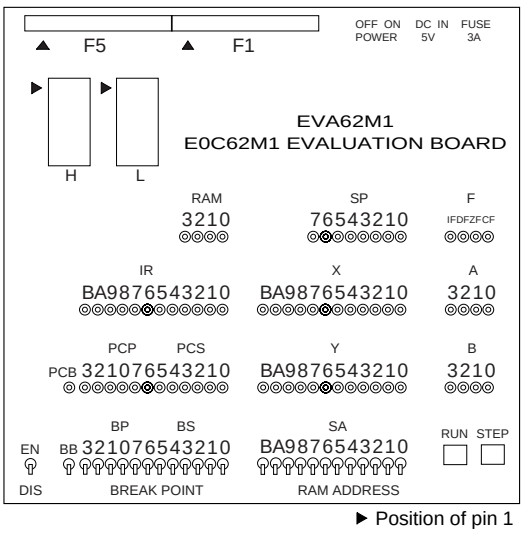

Fig. 3.2.1 Operating panel

■ Switches and keys

- EN/DIS switch
  This switch enables or disables the setting of breakpoints. When the switch is in the EN (Enable) position, the setting of breakpoints is enabled. When it is in the DIS (Disable) position, the setting of breakpoints is disabled. Normally, set the switch to the DIS position.

- BREAK POINT switches (BB, BP, BS)
  These switches set a breakpoint address at which program execution stops. BB, BP, and BS are switches that set the bank, page, and step, respectively, of the breakpoint address. When a switch is in the upper position, it represents "1"; when it is in the lower position, it represents "0".
  The breakpoint address set with the BREAK POINT switches is valid when the EN / DIS switch is in the EN position. When the set address matches the current address of the program being executed, the program breaks, i.e., it stops immediately before executing the instruction at the current address. This function does not work when the EN / DIS switch is in the DIS position.
- RAM ADDRESS switches (SA)
  These switches are used to set RAM addresses and to check the contents of RAM after a program break. When a switch is in the upper position, it represents "1"; when it is in the lower position, it represents "0". The contents of the address set with these switches are displayed on the RAM display LEDs. (However, an I / O memory can be displayed.)
- RUN key
  This key restarts the program after a break. When it is pressed, the program continues, starting with the instruction at the break address.
- STEP key
  When this key is input during a program execution by the RUN key following a program break, at that point it returns to the program break status. If the key is pressed during a break, the instruction step at the break address is executed, and the program breaks again. Thus, the program can be executed step by step.

■ LEDs

The internal state of the CPU is indicated by the LEDs. An LED lit indicates "1"; an LED not lit indicates "0".

- RAM (3210) — The contents of the RAM address, which are fixed by the RAM ADDRESS switch, are displayed.
- IR (BA9876543210) — The instruction at the current address is displayed. If the program has stopped at a breakpoint, the instruction is displayed before execution.
- PCB — The bank address is displayed.
- PCP (3210) — The page address is displayed.
- PCS (76543210) — The step address is displayed.
- SP (76543210) — The value of the stack pointer is displayed.
- X (BA9876543210) — The contents of the X index register are displayed.
- Y (BA9876543210) — The contents of the Y index register are displayed.
- F/IF — The state of the interrupt flag is displayed.
- F/DF — The state of the decimal flag is displayed.
- F/ZF — The state of the zero flag is displayed.
- F/CF — The state of the carry flag is displayed.
- A (3210) — The contents of the A register are displayed.
- B (3210) — The contents of the B register are displayed.

■ ROM sockets

- L (low) and H (high)
  These are IC sockets for target program ROMs. Insert the ROM (L.HEX) containing the 8 low-order bits (I7 to I0) of the machine code into the L socket, and the ROM (H.HEX) containing the 4 high-order bits (IB to I8) into the H socket. Insert the diagnostic ROM into a socket when an operation test is performed.

■ Connectors

- F1 and F5 — Connectors for the ICE interface cable.

3.3 Under Top Cover

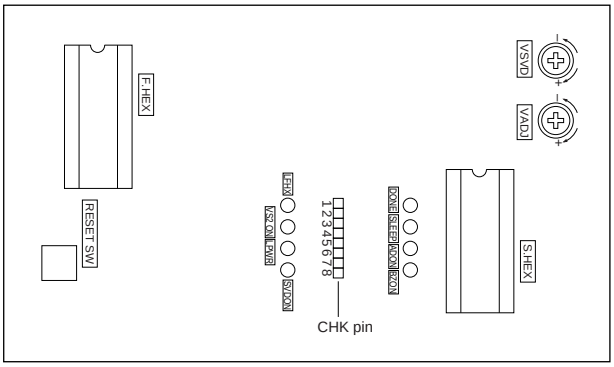

Fig. 3.3.1 Under top cover

- RESET switch
  This switch resets the CPU and starts the target program from page 01H, step 00H.

- VADJ
  This is the control for adjusting the LCD contrast.
  (Refer to Section 2.2, "Differences from Actual IC".)

- VSVD
  This is the control for varying the power supply voltage in simulation to check SVD operation.
  (Refer to Section 2.2, "Differences from Actual IC".)

- VS2 ON, ADON, LPWR, BZON, SVDON
  These are LEDs to indicate the values ("1" or "0") of the following registers. LED lights when "1" is set in the register, and it goes off when "0" is set in the register. Take care of these registers for the power save.

  VS2 ON ..... VSS2 register (E0H, D0)
  LPWR ..... LPWR register (E1H, D0)
  SVDON ..... SVDON register (E3H, D0)
  ADON ..... ADON register (E2H, D0)
  BZON ..... BZON register (D1H, D0)

- SLEEP
  This is LED to indicate the sleep status. It lights during the sleep mode, and it goes off during the normal operation.

- LFHX
  It lights when function option data from a personal computer is loaded using the in-circuit emulator ICE. As result, it can differentiate whether the currently specified function option is due to the ROM (F.HEX) or has been loaded from a personal computer. Refer to the "S5U1C62M20D Manual" in regard to the loading of the function option using the ICE.

- DONE
  This LED lights when the S5U1C62M10E has completed configuration at power-on and is ready for debugging. If this LED is not lit several seconds after power-on, switch the power off and then on again.

- ROM sockets (F.HEX, S.HEX)

  (1) F.HEX
  This is the IC socket into which the ROM (F.HEX) is inserted.
  This ROM includes the function options generated by function option generator (FOG62M2).

  (2) S.HEX
  This is the IC socket into which the ROM (S.HEX) is inserted.
  This ROM includes the segment options generated by segment option generator (SOG62M2).

- CHK pin
  The status of the DONE, LFHX, SLEEP, VS2 ON, ADON, LPWR, BZON and SVDON signals can be checked by an oscilloscope or other instrument.

Pin 1: DONE	Pin 2: LFHX	Pin 3: SLEEP	Pin 4: VS2 ON
Pin 5: ADON	Pin 6: LPWR	Pin 7: BZON	Pin 8: SVDON

3.4 Front Panel

There are several connectors on the front panel for connecting the S5U1C62M10E to the target system.

- I/O #0, I/O #1
  Connector for the I/O cable. The I/O cable is used to connect the S5U1C62M10E to the target system.
- LCD #0, LCD #1
  Connector for the LCD cable. The LCD cable is used to connect the S5U1C62M10E to the target system. LCD #1 cannot be used (reserved connector).
- LCD EMU.
  Connector for the LCD emulator cable.
- LSHX
  It lights when segment option data from a personal computer is loaded using the in-circuit emulator ICE. As result, it can differentiate whether the currently specified segment option is due to the ROM (S.HEX) or has been loaded from a personal computer. Refer to the "S5U1C62M20D Manual" in regard to the loading of the segment option using the ICE.

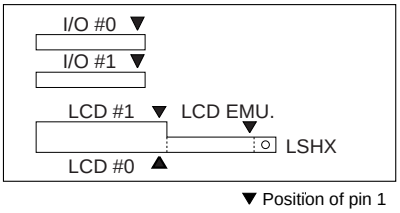

Fig. 3.4.1 Front panel

3.5 Rear Panel

The external power input section is on the rear panel.

- POWER switch (on/off)
  This is a switch to turn on or off the external power supply to S5U1C62M10E. (Please turn off the POWER switch when ICE is connected.)
- FUSE
  This is 3 A tubular fuse for external power supply, and is blown off by current of 3 A or more.
- DC IN 5 V
  This is a connector with external power supply source. The external power supply should be in direct current of 5 V for 3 A or more.

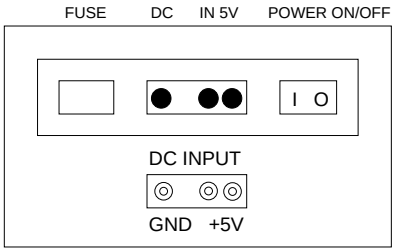

Fig. 3.5.1 Rear panel

Note: Be sure to disconnect external power source before connection with ICE, because power is supplied from ICE when you connect S5U1C62M10E to ICE.

4 CABLE CONNECTION

This section describes how to connect the power cable to the S5U1C62M10E, and the S5U1C62M10E to the ICE and the target system.

Note: Turn the power of all equipment off before connecting or disconnecting cables.

4.1 Connection to ICE

The S5U1C62M10E is connected to the ICE by connecting the two interface cables (F1 and F5). Use S5U1C62M10E connectors F1 and F5 with the projections facing outwards. Use ICE connectors F1 and F5 with the projections facing inwards (cable side).
Figures 4.1.1 and 4.1.2 show the external view and connection diagram of the ICE interface cable.

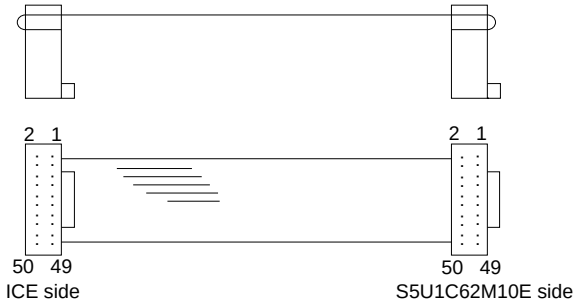

Fig. 4.1.1 External view of the ICE interface cable

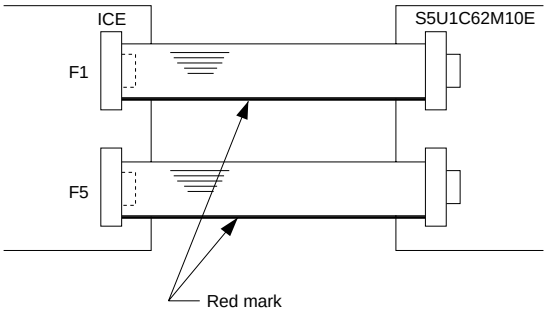

Fig. 4.1.2 Connection diagram

4.2 Power Cable Connection

When using the S5U1C62M10E on its own, it must be supplied with power (5 V DC, 3 A or more) from an external source through the power cable.
When the S5U1C62M10E is connected to the ICE, power is supplied by the ICE; therefore, the power cable is not necessary. Disconnect the power cable if it is already connected.
Figure 4.2.1 shows the connection of the power cable pins.

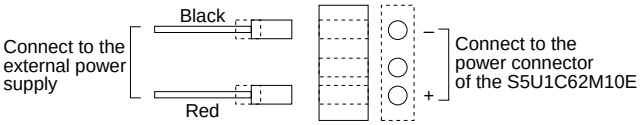

Fig. 4.2.1 Connection of power cable pins

4.3 Connection to Target System

The I/O #0, I/O #1 and LCD #0 connectors are used to connect the S5U1C62M10E to the target system.
The signal output from the LCD #0 connector is the same as those of the actual IC at the function level. Therefore, the S5U1C62M10E may be connected to the LCD of the target system without any changes. The LCD contrast (LCD drive voltage) is adjusted by the VADJ control.

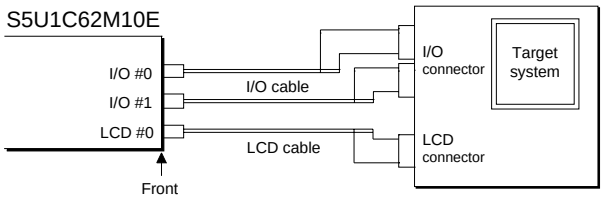

Fig. 4.3.1 Connection of target system

Take the following precautions when connecting the S5U1C62M10E to the target system:

- Power is supplied to the S5U1C62M10E, unlike the chips. (See the "S1C62M20 Technical Manual".)
- Do not use any pins that cannot be connected.

Tables 4.3.1 and 4.3.2 list the pins of the I/O #0 and I/O #1 connectors.
Table 4.3.3 lists the pins of the LCD #0 connector.

Table 4.3.1 I/O #0 connector pins

Pin No.	Signal name	Pin No.	Signal name
1	VDD (+5V)	2	VDD (+5V)
3	VDD (+5V)	4	VDD (+5V)
5	K00	6	K01
7	K02	8	K03
9	K10	10	K11
11	K12	12	K13
13	Cannot be connected	14	Cannot be connected
15	R00	16	R01
17	R02	18	R03
19	BZ	20	$\overline{BZ}$
21	Cannot be connected	22	Cannot be connected
23	P00 (SIN)	24	P01 (SOUT)
25	P02 (SCLK)	26	P03 (SRDY)
27	Cannot be connected	28	Cannot be connected
29	RESET	30	Cannot be connected
31	TEST	32	Cannot be connected
33	Cannot be connected	34	Cannot be connected
35	Cannot be connected	36	Cannot be connected
37	Cannot be connected	38	Cannot be connected
39	Cannot be connected	40	Cannot be connected
41	Cannot be connected	42	Cannot be connected
43	Cannot be connected	44	Cannot be connected
45	Cannot be connected	46	Cannot be connected
47	VSS (GND)	48	VSS (GND)
49	VSS (GND)	50	VSS (GND)

Table 4.3.2 I/O #1 connector pins

Pin No.	Signal name	Pin No.	Signal name
1	VDD	2	VDD
3	VRF1	4	VRF2
5	VADJ	6	VSSA *1
7	ADI	8	VSSA *1
9	ADO	10	VSSA *1
11	AVX1	12	AVX2
13	CO	14	VSSA *1
15	CAZ	16	VSSA *1
17	CI	18	VSSA *1
19	BF1	20	BF2
21	BF3	22	VSSA *1
23	IIL	24	IIH
25	CFI	26	SGND
27	OVX	28	VSSA *1
29	OVSG	30	VSSA *1
31	VI	32	VSSA *1
33	R1	34	VSSA *1
35	R2/VI5	36	VSSA *1
37	R3/VI4	38	VSSA *1
39	R4/VI3	40	VSSA *1
41	R5/VI2	42	VSSA *1
43	R6	44	VSSA *1
45	CH	46	CL
47	VSSA *1	48	VSSA *1
49	VSS	50	VSS

*1 : VSSA is generated inside of the S5U1C62M10E.

Table 4.3.3 LCD #0 connector pins

Pin No.	Signal name	Pin No.	Signal name
1	COM0	2	COM1
3	COM2	4	COM3
5	Cannot be connected	6	Cannot be connected
7	Cannot be connected	8	Cannot be connected
9	SEG0	10	SEG1
11	SEG2	12	SEG3
13	SEG4	14	SEG5
15	SEG6	16	SEG7
17	SEG8	18	SEG9
19	SEG10	20	SEG11
21	SEG12	22	SEG13
23	SEG14	24	SEG15
25	Cannot be connected	26	Cannot be connected
27	Cannot be connected	28	Cannot be connected
29	Cannot be connected	30	Cannot be connected
31	Cannot be connected	32	Cannot be connected
33	Cannot be connected	34	Cannot be connected
35	Cannot be connected	36	Cannot be connected
37	Cannot be connected	38	Cannot be connected
39	Cannot be connected	40	Cannot be connected
41	Cannot be connected	42	Cannot be connected
43	Cannot be connected	44	Cannot be connected
45	Cannot be connected	46	Cannot be connected
47	Cannot be connected	48	Cannot be connected
49	Cannot be connected	50	Cannot be connected
51	Cannot be connected	52	Cannot be connected
53	Cannot be connected	54	Cannot be connected
55	Cannot be connected	56	Cannot be connected
57	Cannot be connected	58	Cannot be connected
59	Cannot be connected	60	Cannot be connected

Note: Do not use the pins that cannot be connected.

5 OPERATION METHOD OF S5U1C62M10E

5.1 Preparation

This section describes the common preparation work necessary when the S5U1C62M10E is used by itself and when it is connected to the ICE. Connection method, refer to Chapter 4, "CABLE CONNECTION".
Check the S5U1C62M10E operation by mounting the supplied diagnostic ROMs as instructed in Chapter 6. It is recommended that this test be performed periodically.
Before doing the following, be sure to turn the POWER switch of the S5U1C62M10E off.

5.1.1 Creation of target system

Mount the LCD panel, keys, and switches on the board to build a target system. Use the I/O connector and LCD connectors supplied with the S5U1C62M10E to connect the S5U1C62M10E to the target system. (For the pin layout of each connector, see Tables 4.3.1–4.3.3 in Chapter 4.)

Note: There is some difference in specifications between the S5U1C62M10E and the actual IC. Refer to Section 2.2, "Differences from Actual IC" when building a target system.

5.1.2 Creation and installation of ROMs

Create the program ROMs, option ROMs, and insert them into the sockets of the S5U1C62M10E. When the S5U1C62M10E is delivered, the function option ROM and segment option ROM for a diagnostic program are already installed. Replace them with the created ROMs.

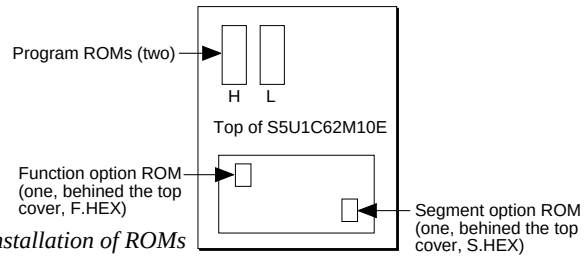

Fig. 5.1.2.1 Installation of ROMs

- Program ROMs (two)
  The program ROMs contain the application program machine code. Write the HEX files output by the ASM62M2 cross-assembler into EPROMs to create program ROMs. Since two HEX files containing the high-order section (C2M2XXXH.HEX) and the low-order section (C2M2XXXL.HEX) of the machine code are output, two ROMs are created. Insert H.HEX into socket H and L.HEX into socket L on the top panel. These ROMs are not necessary when connecting the S5U1C62M10E to the ICE. In addition, it is necessary to write the object data into the EPROM attaching the offset address as Table 5.1.2.1 according to the type of EPROM that is used.

Table 5.1.2.1 Offset address

Type of EPROM	Offset value
27C64	0000H (without offset)
27C128	0000H (without offset)
27C256	4000H
27C512	C000H

- Function option ROM (one)
  The function option ROM is used to specify function options, such as I/O ports. Create the option ROM from the function option HEX file (C2M2XXXF.HEX) output by the function option generator, and insert it into the socket (F.HEX) in the top cover. This ROM is effective even when the ICE is connected, however, this ROM is disregarded due to the loading of the data from the ICE.

- Segment option ROM (one)
  The segment option ROM is used to specify segment output port. Create the option ROM from the segment option HEX file (C2M2XXXS.HEX) output by the segment option generator, and insert it into the S.HEX socket in the top cover. This ROM is effective even when the ICE is connected, however, this ROM is disregarded due to the loading of the data from the ICE.

- EPROM specifications
  Use EPROMs with the following specifications:

  Program ROM: 27C64 to 27C512 (250 ns or less access time)
  Function option ROM: 27C64 to 27C512 (250 ns or less access time)
  Segment option ROM: 27C64 to 27C512 (250 ns or less access time)

5.2 Independent Use of S5U1C62M10E

This section describes operation when using the S5U1C62M10E by itself.
The S5U1C62M10E may be used independently by connecting a power supply to it. Use a 5 V DC regulator (more than 3 A) as an external power supply. Connect it with the correct polarity (+ and -).
(Refer to Section 4.2, "Power Cable Connection".)

5.2.1 Power on/off

Before turning the POWER switch of the S5U1C62M10E on, confirm the following:

(1) The power cable is connected correctly.
(2) The target system is connected correctly.
(3) The ROMs have been installed correctly.

After confirming the above items, turn the POWER switch of the S5U1C62M10E on using the following procedure:

(1) Turn the regulator on. If the regulator is of the variable-voltage type, set the output voltage to 5 V.
(2) Turn the POWER switch of the S5U1C62M10E on.

Note: To turn the POWER switch of the S5U1C62M10E off, then on, turn it off, wait for 10 seconds or more, and then turn it on.

After the POWER switch of the S5U1C62M10E has been turned on, the DONE LED (green) on the top cover lights after several seconds to indicate that debugging may proceed. If the DONE LED is still off 10 seconds or more after the POWER switch has been turned on, do the following:

(1) Turn the POWER switch of the S5U1C62M10E off.
(2) Confirm that the ROMs have been installed properly, and the cables connected properly.
(3) Check the fuse.
(4) Turn the POWER switch of the S5U1C62M10E on.

If the DONE LED still does not light, do a self-diagnosis.
For the self-diagnosis method, refer to the Chapter 6.

5.2.2 Debugging

When the S5U1C62M10E is used alone, it provides the following debugging functions. The method of operation is given below.

- Program free run
  When the RESET switch (on the top cover) is pressed, the S5U1C62M10E enters the program run state, and executes the application program from page 1, step 0. Before pressing the RESET switch after the power to the S5U1C62M10E has been switched on, make sure that the DONE LED is lit.

- Program break
  The program may be stopped at the address set by the BREAK POINT switches. This function is valid when the EN / DIS switch is in the EN position. The program stops at the program address where the breakpoint is set. It stops before the instruction at the breakpoint is executed. When the STEP key is input during a program execution by the RUN key following a program break, at that point it returns to the program break status.
  When the program is stopped, the LED indicators for the internal state of the CPU show the current state. So debug by checking this state against the program.
  To restart the program after a break, set the next breakpoint, and press the RUN key.
  The single-step operation (described below) can be performed by pressing the STEP key instead of the RUN key.

- Single step
  By pressing the STEP key after a program break, the one instruction at the current address can be executed, and the program stopped at the next address (program break). Using this function, the program run state can be confirmed.

- Other functions
  The operation of the SVD can be confirmed with the VSVD control.
  The LCD contrast can be adjusted with the VADJ control.
  (Refer to Section 2.2, "Differences from Actual IC".)
  The VSS2, ADON, LPWR, BZON and SVDON register values and the status of the SLEEP and LFHX can be confirmed with the LEDs displays and CHK pins.

5.3 Operation When ICE is Connected

This section explains the operation and use of the S5U1C62M10E when it is connected to the ICE.
Set up the S5U1C62M10E as follows when it is connected to the ICE:

(1) Do not connect the power supply.
(2) Keep on turning the POWER switch off.
(3) Set all the switches on the operation panel to their lower positions.

5.3.1 Power on/off

Power to the S5U1C62M10E is supplied by the ICE, and the power is switched on and off by pressing the POWER switch of the ICE. Keep the POWER switch of the S5U1C62M10E off.

Note: To turn the POWER switch of the ICE off, then on, turn it off, wait for 10 seconds or more, and then turn it on.

After the POWER switch of the ICE has been turned on, the DONE LED (green) on the top cover of the S5U1C62M10E lights after several seconds to indicate that debugging may proceed. If the DONE LED is still off 10 seconds or more after the POWER switch has been turned on, do the following:

(1) Turn the POWER switch of the ICE off.
(2) Confirm that the circuit breaker of the ICE is on.
(3) Confirm that the ROMs have been installed properly and the cables connected properly.
(4) Turn the POWER switch of the ICE on.

If the DONE LED still does not light, do a self-diagnosis.
For the self-diagnosis method, refer to the Chapter 6.

5.3.2 Debugging

Debugging is done with the host computer, and the S5U1C62M10E is controlled by the ICE. For the method of operation, refer to the "S1C62 Family Development Tool Reference Manual" and "S5U1C62M20D Manual". The S5U1C62M10E can control the following three functions:

(1) Pseudo power supply voltage change with the VSVD control
(2) LCD contrast adjustment with the VADJ control (the drive voltage of each actual IC is fixed)
(3) RESET switch

The other switches and LEDs are invalid. Do not operate the switches of the S5U1C62M10E side. The switches do not function when the target program ROM is installed.

6 OPERATING TEST

Self-diagnosis of the S5U1C62M10E can be performed with the following operating tests. To perform these tests, one function option ROM, one segment ROM and two program ROMs (supplied) are required. If these ROMs have not been installed, insert them into the sockets. To use the S5U1C62M10E independently, connect the external power supply (5 V DC, 3 A).
This test checks the start and single-step operations and the program break function of the S5U1C62M10E in three stages (1 to 3). If the S5U1C62M10E does not operate normally, check whether the ROMs have been installed correctly and whether the external power is being input correctly. Then perform the test again from stage 1. If the test repeatedly fails after being retried several times, the S5U1C62M10E is faulty.

■ Stage 1

In stage 1, check whether the DONE LED lights correctly.

(1) Open the top cover.

(2) Confirm that the POWER switch is off.

(3) Insert the diagnostic ROMs (H.HEX and L.HEX) into sockets H and L (the sockets into which program ROMs are normally inserted) on the panel. Confirm that the function option ROM and segment option ROM have been installed properly.

(4) Set the EN / DIS switch to the DIS position.

(5) Turn the POWER switch on. If the POWER switch has just been turned off, wait for at least 10 seconds before turning it on.

(6) Check whether the DONE LED (green) under the top cover lights correctly. After confirming that the DONE LED lights correctly, go to stage 2.

(7) If the LED does not light within 10 seconds of the power being switched on, turn the POWER switch off, and check the fuse and external power connector. Wait for at least 10 seconds, then perform the test again.

■ Stage 2

In stage 2, the setting of breakpoints is checked.

(1) Set the BREAK POINT switches as follows:

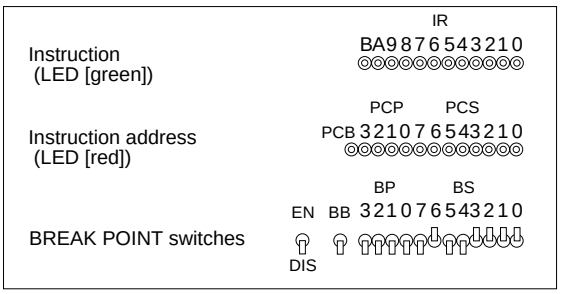

(2) Set the EN / DIS switch to the EN position.

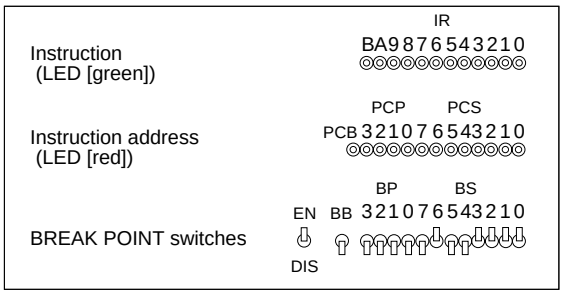

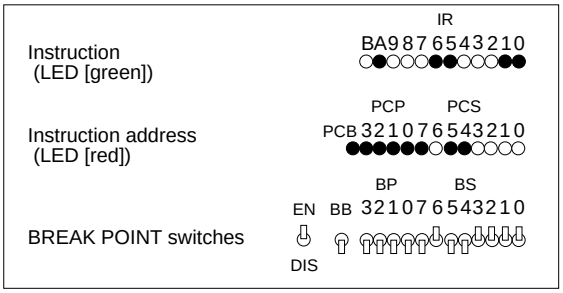

(3) When the value indicated by PCP and PCS matches the setting of the BREAK POINT switches, the CPU stops, and the LEDs light as follows:

(4) When the RUN switch is pressed again, the test returns to step 3.

O: ON
●: OFF

■ Stage 3

In stage 3, single step operations are checked.

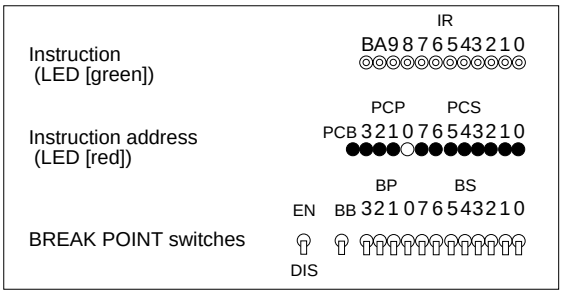

(1) Set the EN / DIS switch to the DIS position. Hold down the RESET switch under the top cover. Confirm that the instruction address LEDs (only PCP 0) light.

(2) When the RESET switch is released, the LED blinks.

(3) When the STEP switch is pressed once lightly, the LED stops blinking.

(4) When the STEP switch is pressed again, the CPU performs a single-step operation. At the same time, the LED stops blinking. Press the STEP switch several times to confirm that single-step operations are performed properly.

(5) When the RUN switch is pressed, the test returns to step 2 in stage 3.

(6) Turn the POWER switch off.

Operating test is now complete.
If the test ends normally, the basic functions of the S5U1C62M10E are normal.

7 PRODUCT SPECIFICATIONS

The components specifications of the S5U1C62M10E are listed below.

■ S5U1C62M10E

Dimensions:	325 mm (width) × 382 mm (depth) × 105 mm (height)		(Including rubber feet)
Weight:	About 6 kg	(main unit only)	
Color:	Cygnus white		
Power supply:	5 V DC, 3 A or more	(from external power supply)	
	When connected to the ICE, power is supplied by the ICE.		
Board:	Main board × 1		
	Sub board × 3		

■ ICE interface cable (supplied with ICE)

S5U1C62M10E connector:	3433-6002LCSC or equivalent	
Cable connector:	3425-6500SC	
Cable:	50-pin flat cable × 2	
Interface:	CMOS interface (5 V)	
Length:	About 50 cm	(Two cables are the same)

■ LCD connection cable (supplied with S5U1C62M10E)

S5U1C62M10E connector:	J3372-P302VE or equivalent
Cable connector:	7960-6500ASC
Cable:	60-pin flat cable × 1
Interface:	CMOS interface (5 V)
Length:	About 50 cm

■ LCD emulator cable (supplied with LCD emulator)

S5U1C62M10E connector:	3432-5002LCSC or equivalent
Cable connector:	7940-6500SC
Cable:	40-pin flat cable × 1
Interface:	CMOS interface (5 V)
Length:	About 50 cm

■ I/O cable (supplied with S5U1C62M10E)

S5U1C62M10E connector:	3433-5002LCSC or equivalent	
Cable connector:	7950-6500SC	
Cable:	50-pin flat cable × 2	
Interface:	CMOS interface (5 V)	
Length:	About 50 cm	(Two cables are the same)

■ Power cable (supplied with S5U1C62M10E)

S5U1C62M10E connector:	MOLEX 5276-03A or equivalent
Cable connector:	MOLEX 5196-03
Other side connector:	(According to power supply specifications)
Cable length:	About 80 cm
Capacity:	5 V DC, 3 A or more

■ Accessories

Fuse type / rating:	MGC-ULCSA 250V 3 A × 1		
60-pin connector:	For connecting to target system	3372-6002LCSC × 1	(For LCD cable connection)
50-pin connector:	For connecting to target system	3433-6002LCSC × 2	(For I / O cable connection)

■ EPROM

For programs:	Intel i27C64–i27C512 or equivalent	(Access time 250 ns or less)
For function options:	Intel i27C64–i27C512 or equivalent	(Access time 250 ns or less)
For segment options:	Intel i27C64–i27C512 or equivalent	(Access time 250 ns or less)

EPSON International Sales Operations

AMERICA

EPSON ELECTRONICS AMERICA, INC.

- HEADQUARTERS -
150 River Oaks Parkway
San Jose, CA 95134, U.S.A.
Phone: +1-408-922-0200 Fax: +1-408-922-0238

- SALES OFFICES -

West
1960 E. Grand Avenue
El Segundo, CA 90245, U.S.A.
Phone: +1-310-955-5300 Fax: +1-310-955-5400

Central
101 Virginia Street, Suite 290
Crystal Lake, IL 60014, U.S.A.
Phone: +1-815-455-7630 Fax: +1-815-455-7633

Northeast
301 Edgewater Place, Suite 120
Wakefield, MA 01880, U.S.A.
Phone: +1-781-246-3600 Fax: +1-781-246-5443

Southeast
3010 Royal Blvd. South, Suite 170
Alpharetta, GA 30005, U.S.A.
Phone: +1-877-EEA-0020 Fax: +1-770-777-2637

EUROPE

EPSON EUROPE ELECTRONICS GmbH

- HEADQUARTERS -
Riesstrasse 15
80992 Munich, GERMANY
Phone: +49-(0)89-14005-0 Fax: +49-(0)89-14005-110

SALES OFFICE
Altstadtstrasse 176
51379 Leverkusen, GERMANY
Phone: +49-(0)2171-5045-0 Fax: +49-(0)2171-5045-10

UK BRANCH OFFICE
Unit 2.4, Doncastle House, Doncastle Road
Bracknell, Berkshire RG12 8PE, ENGLAND
Phone: +44-(0)1344-381700 Fax: +44-(0)1344-381701

FRENCH BRANCH OFFICE
1 Avenue de l' Atlantique, LP 915 Les Conquerants
Z.A. de Courtaboeuf 2, F-91976 Les Ulis Cedex, FRANCE
Phone: +33-(0)1-64862350 Fax: +33-(0)1-64862355

BARCELONA BRANCH OFFICE

Barcelona Design Center
Edificio Prima Sant Cugat
Avda. Alcalde Barrils num. 64-68
E-08190 Sant Cugat del Vallès, SPAIN
Phone: +34-93-544-2490 Fax: +34-93-544-2491

ASIA

EPSON (CHINA) CO., LTD.
28F, Beijing Silver Tower 2# North RD DongSanHuan
ChaoYang District, Beijing, CHINA
Phone: 64106655 Fax: 64107319

SHANGHAI BRANCH
4F, Bldg., 27, No. 69, Gui Jing Road
Caohejing, Shanghai, CHINA
Phone: 21-6485-5552 Fax: 21-6485-0775

EPSON HONG KONG LTD.
20/F., Harbour Centre, 25 Harbour Road
Wanchai, Hong Kong
Phone: +852-2585-4600 Fax: +852-2827-4346
Telex: 65542 EPSCO HX

EPSON TAIWAN TECHNOLOGY & TRADING LTD.
10F, No. 287, Nanking East Road, Sec. 3
Taipei
Phone: 02-2717-7360 Fax: 02-2712-9164
Telex: 24444 EPSONTB

HSINCHU OFFICE
13F-3, No. 295, Kuang-Fu Road, Sec. 2
HsinChu 300
Phone: 03-573-9900 Fax: 03-573-9169

EPSON SINGAPORE PTE., LTD.
No. 1 Temasek Avenue, #36-00
Millenia Tower, SINGAPORE 039192
Phone: +65-337-7911 Fax: +65-334-2716

SEIKO EPSON CORPORATION KOREA OFFICE
50F, KLI 63 Bldg., 60 Yoido-dong
Youngdeungpo-Ku, Seoul, 150-763, KOREA
Phone: 02-784-6027 Fax: 02-767-3677

SEIKO EPSON CORPORATION
ELECTRONIC DEVICES MARKETING DIVISION

Electronic Device Marketing Department
IC Marketing & Engineering Group
421-8, Hino, Hino-shi, Tokyo 191-8501, JAPAN
Phone: +81-(0)42-587-5816 Fax: +81-(0)42-587-5624

ED International Marketing Department Europe & U.S.A.
421-8, Hino, Hino-shi, Tokyo 191-8501, JAPAN
Phone: +81-(0)42-587-5812 Fax: +81-(0)42-587-5564

ED International Marketing Department Asia
421-8, Hino, Hino-shi, Tokyo 191-8501, JAPAN
Phone: +81-(0)42-587-5814 Fax: +81-(0)42-587-5110

S5U1C62M10E Manual
(Evaluation Board for S1C62M20)

SEIKO EPSON CORPORATION
ELECTRONIC DEVICES MARKETING DIVISION

■ **EPSON Electronic Devices Website**

http://www.epson.co.jp/device/

First issue March, 1995
Printed April, 2001 in Japan ⓂA